ASSEMBLY INSTRUCTIONS

ITEM CODE : IN361

ITEM DESCRIPTION: OPEN SLOT BEDSIDE

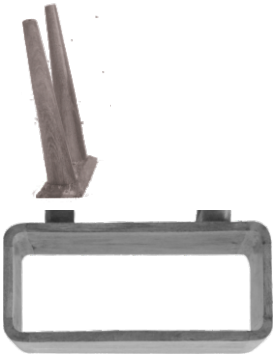

1

Reverse the bedside & place the leg as shown & align the leg to match the apron.

Insert the Bolt to fix the leg with the Bedside top and tighten the nut with the washer as shown in fig1

2

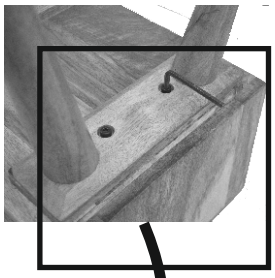

3

Fix the other leg in the similar way

Reverse the bedside straight. Now your bedside is ready for use

4
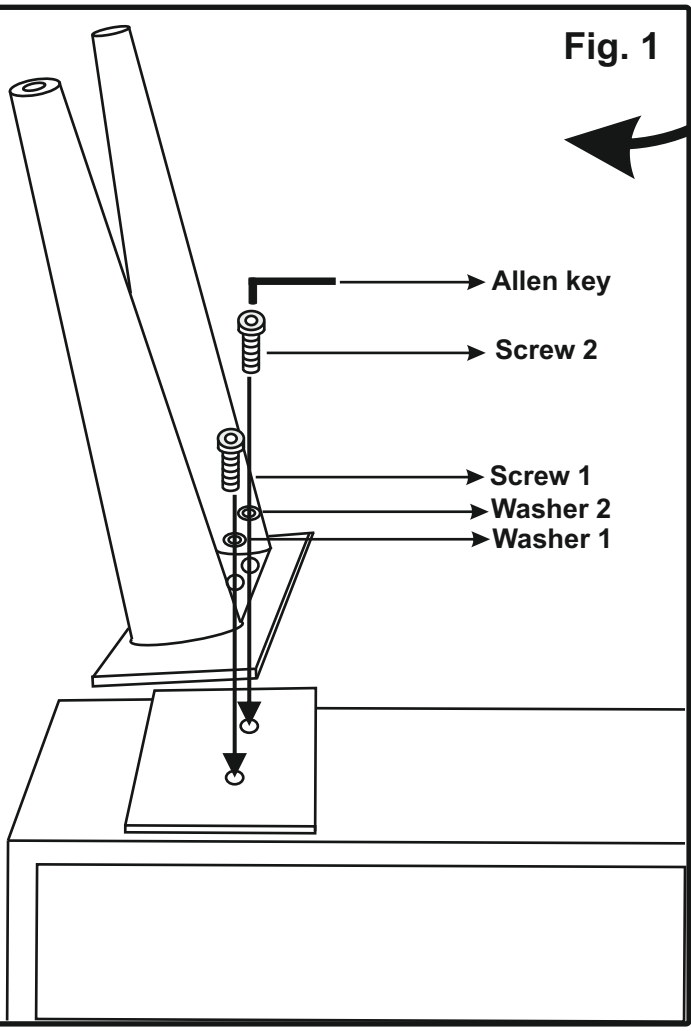
Fig. 1